Diagnosis (04)

Bayesien Networks

Alban Grastien
alban.grastien@rsise.anu.edu.au

Model

Knowledge about "how the world works"

[Russel and Norvig, 2003]

Mathematical representation of the behavior of the environment that enables to simulate it.

[Grastien, 2005]

About the Models

Davis and Hamscher

" There will always be things about the device that the model does not capture. The good news is that the things the model fails to capture may have no pragmatic consequence.
A schematic for a digital circuit will not indicate the color, smell or coefficient of friction of the plastic used to package the chips, but this typically doesn't matter. In theory, the model is always incomplete, and hence incorrect, in some respects, but it is a demonstration of the power and utility of engineering approximations that models are often pragmatically good enough."

What a Bayesian Network is

- A directed acyclic graph:
  - a node is a variable + a domain of values
  - an arc between two nodes is a conditional dependency between the assignments of the variables on the nodes.
- In a causal Bayesian network, the arcs represent causal relations.

  $\rightarrow$ Causal Graph

Example

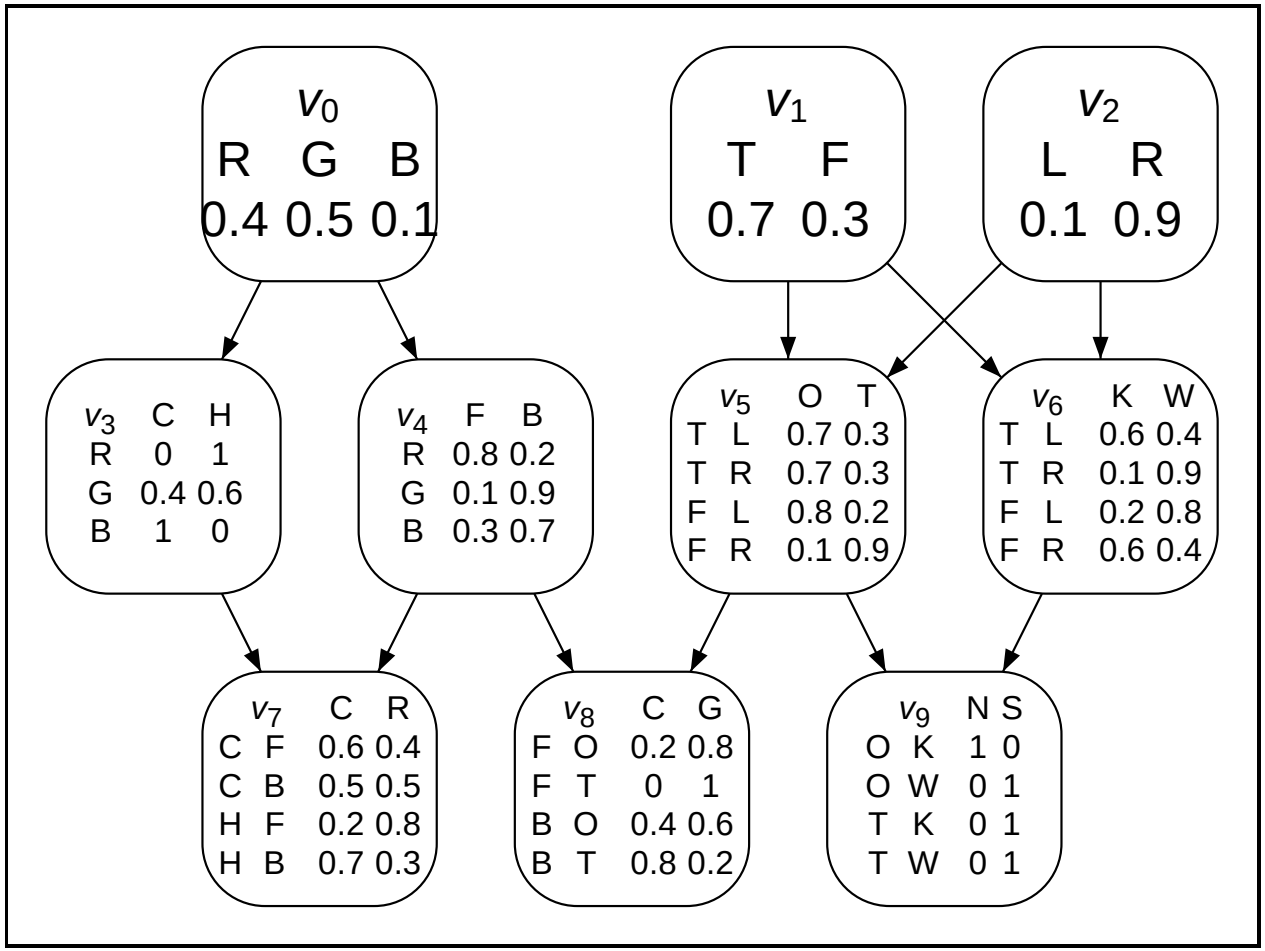
v_0
R G B
0.4 0.5 0.1
v_1
T F
0.7 0.3
v_2
L R
0.1 0.9
v_3 C H
R 0 1
G 0.4 0.6
B 1 0
v_4 F B
R 0.8 0.2
G 0.1 0.9
B 0.3 0.7
v_5 O T
T L 0.7 0.3
T R 0.7 0.3
F L 0.8 0.2
F R 0.1 0.9
v_6 K W
T L 0.6 0.4
T R 0.1 0.9
F L 0.2 0.8
F R 0.6 0.4
v_7 C R
C F 0.6 0.4
C B 0.5 0.5
H F 0.2 0.8
H B 0.7 0.3
v_8 C G
F O 0.2 0.8
F T 0 1
B O 0.4 0.6
B T 0.8 0.2
v_9 N S
O K 1 0
O W 0 1
T K 0 1
T W 0 1

State of the System

State

A state of the system is a valuation of all the variables.

v_0	v_1	v_2	v_3	v_4	v_5	v_6	v_7	v_8	v_9
R	$\boxed{T}$	L	C	F	$\boxed{O}$	K	C	$\boxed{C}$	N
$\boxed{G}$	F	$\boxed{R}$	$\boxed{H}$	$\boxed{B}$	T	$\boxed{W}$	$\boxed{R}$	G	$\boxed{S}$
B									

Probability

$$P(G_0) \times P(T_1) \times P(R_2) \times$$
$$P(H_3 \mid G_0) \times P(B_4 \mid G_0) \times P(O_5 \mid T_1 \wedge R_2) \times P(W_6 \mid T_1 \wedge R_2) \times$$
$$P(R_7 \mid H_3 \wedge B_4) \times P(C_8 \mid B_4 \wedge O_5) \times P(S_9 \mid O_5 \wedge W_6) =$$

$$\frac{1{,}285{,}956}{10^8} \simeq 1.3\%$$

Probabilities

Can You Compute...

- $P(R_7 \mid G_0 \wedge T_1 \wedge R_2)$?
- $P(G_0 \mid H_3 \wedge B_4)$?
- $P(R_0 \mid R_7 \wedge G_8 \wedge N_9)$?

- The most probable value of v_7 given $G_0 \wedge T_1 \wedge R_2$?
- The most probable value of v_0 given $C_3 \wedge F_4$?
- The most probable value of v_0 given $R_7 \wedge G_8 \wedge N_9$?

System Model

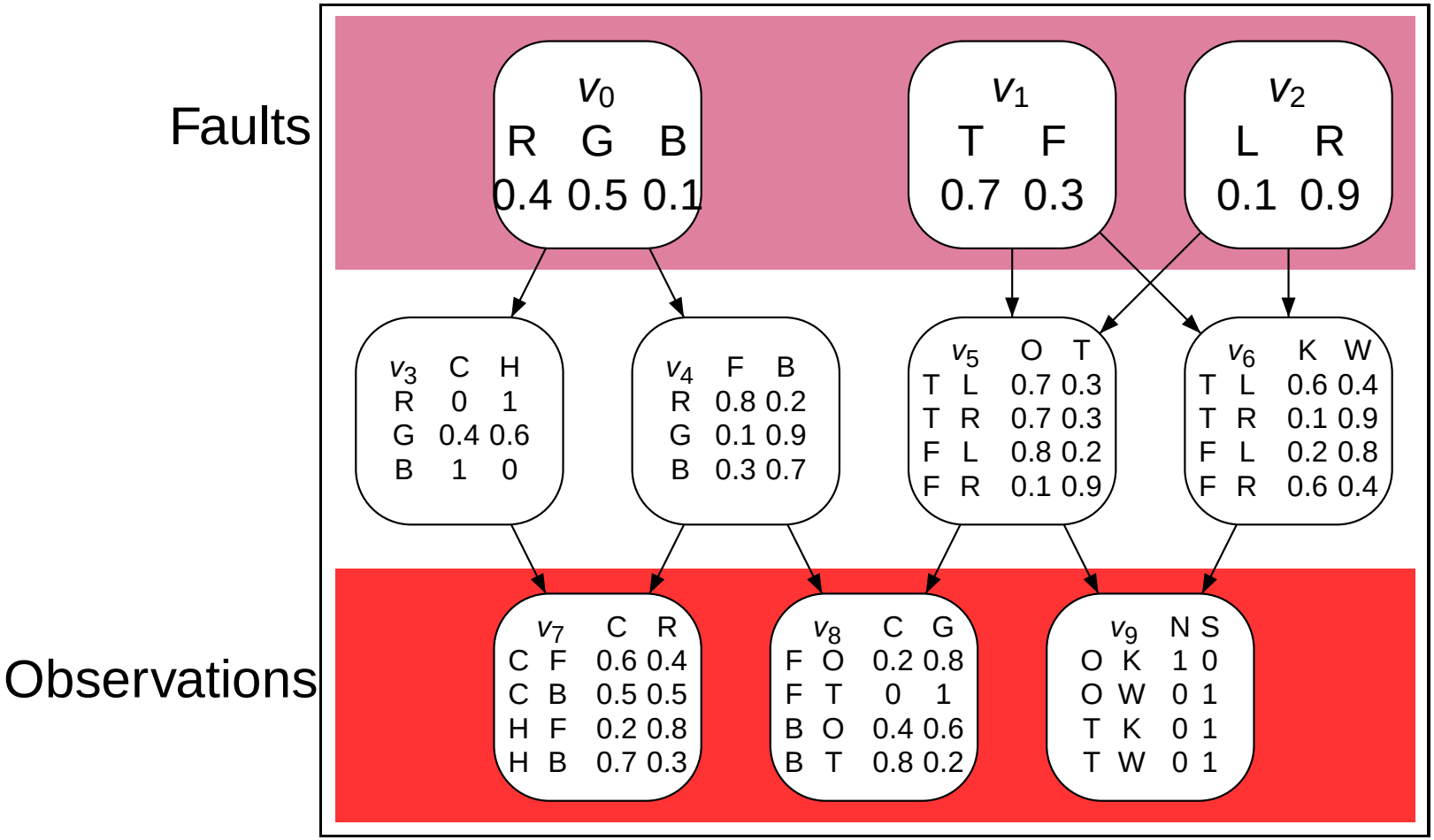

Diagnosis

Diagnosis State

A diagnosis state is a valuation of the fault variables.

Diagnosis

Given a distribution of probabilities (usually 0s and 1s) over the valuation of the observation variables

- Determine the most probable diagnosis states
- Compute the distribution of probabilities over the diagnosis states

Example

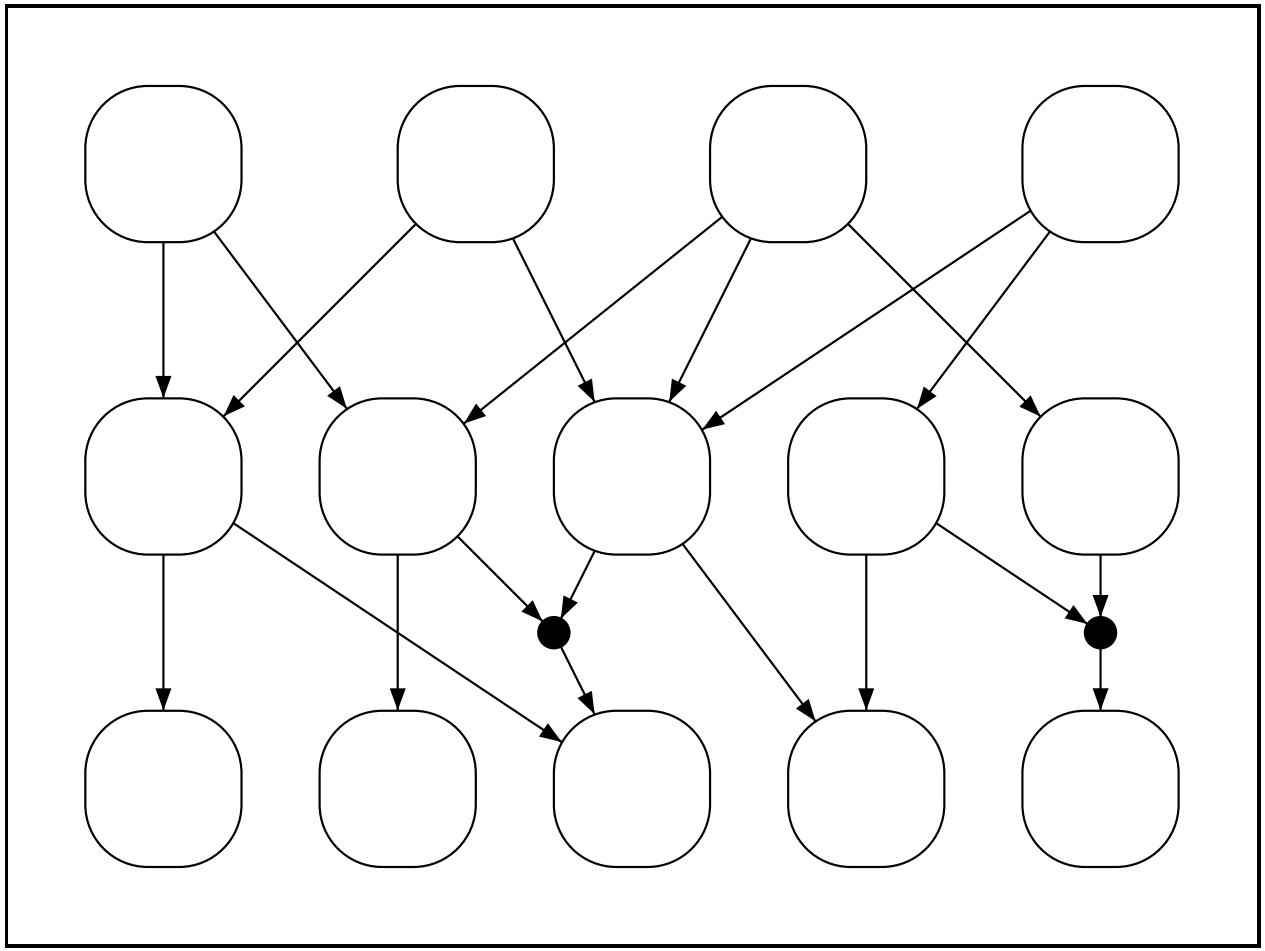

Extension

Temporal Behavior

In some domain, there is a delay before a cause generates an effect.
Example: a high temperature can damage a device after several minutes.