ENGN3227 Analogue Electronics

Electronics Project: Bass Drum Synthesiser

John Pillans (u2547368)
James Ridgway (u2570505)

Abstract:

A bass drum synthesiser with variable frequency and decay time was constructed. The second order damped oscillatory response was loosely based on the iconic Roland 808 Bass Drum sound. Control theory was used to model the basic system and analysis of the root-locus and resulting impulse response of the system illustrated the required response. Desired specifications in terms of frequency, amplitude variation and damping were determined and a more detailed design was then carried out using SPICE based simulations (using Circuit Maker Pro 2000), and iteratively modified until simulations indicated that the designed specifications had been satisfactorily met. A PCB was designed using Protel and was produced. After the circuit was assembled on the PCB, tests were performed verifying the performance of the circuit.

Background:

The electronic synthesis of drum sounds is by no means a new field. “Rhythm machines” that could produce a variety of different rhythms at specific pitches appeared in the 1930s. In the 1960s rhythm machines were used to accompany organists. The drum machine started to gain widespread use in the 1970s with the release of Ace Tone’s Rhythm Ace.

Early drum machines used analogue sound syntheses to create drum sounds. A snare drum could be simulated by a short pulse of white noise, while a bass drum could be simulated with a sine-wave. Later machines made use of digital sampling to attain a more accurate reproduction, though some analogue models, such as the Roland 808 have remained popular as people sought out new, synthesised sounds.

Analysis of the Roland 808 Bass Drum circuit [reference 2] revealed that a damped sinusoid was used to simulate the drum sound. Using this as a guide it was determined that our design would be based on a system exhibiting a damped oscillatory second order response.

Theory:

Research into previous designs revealed a possible topology using a feed forward compensator to adjust the damping of the second order response. To try this method the following model was used:

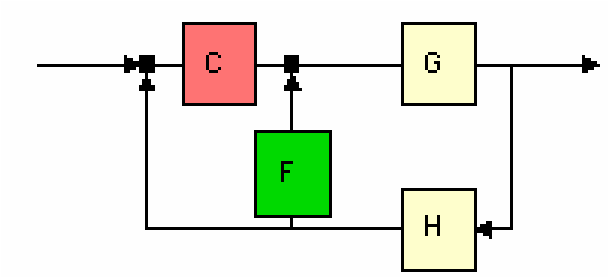

Figure 2, Closed Loop System Model

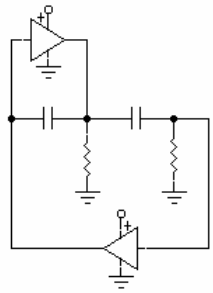

Figure 3, Circuit Model

Substituting plausible values for the components, calculating the transfer equations of the circuit yields the following models:

$$F = \frac{s}{1000 + 2s}$$

$$G = \frac{s}{2128 + s}$$

$$H = 100$$

The resulting closed loop transfer function is:

$$TF_{cl} = \frac{CG}{1 + (C + F)GH}$$

These equations were entered into the Root Locus Design GUI in MATLAB and the impulse response of the closed loop system was generated (Figure 3). This verified the system generated an oscillatory second order response.

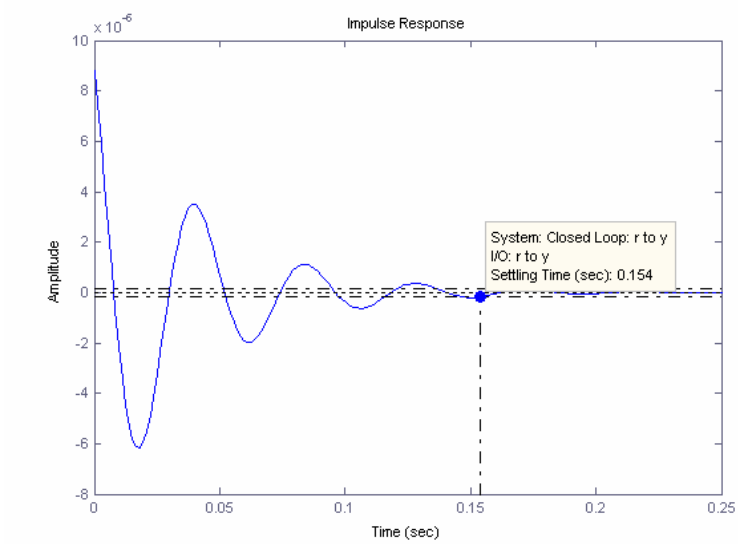

Figure 4, Output (C ≈ 0)

To examine the effect of the feed forward compensator the root locus was plotted with respect to the gain of the compensator (C). It can be seen that the frequency of the system varies minimally with the gain (the root locus almost follows the illustrated natural frequency design constraint) and it provides an almost direct control over the damping ratio (and hence settling time).

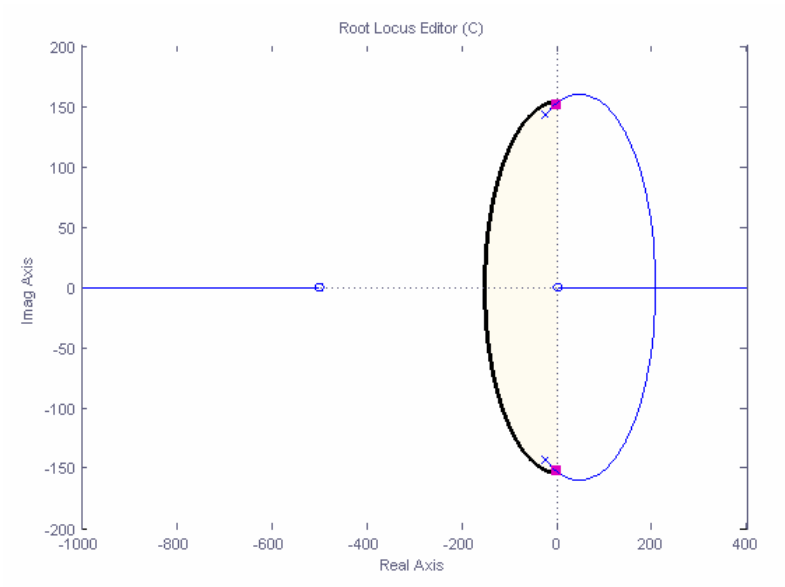

Figure 5, Root Locus

To confirm this, the compensator gain was varied while observing the impulse response of the system. It was found the stability boundary was situated at a compensator gain of approximately 0.5 and a gain of 0.0453 corresponded to a settling time of 1 second (Figure 5). This range of gains from 0 to 0.0453 produced no visible change in the output frequency, thus confirming the design of a feed forward compensator to adjust the settling time.

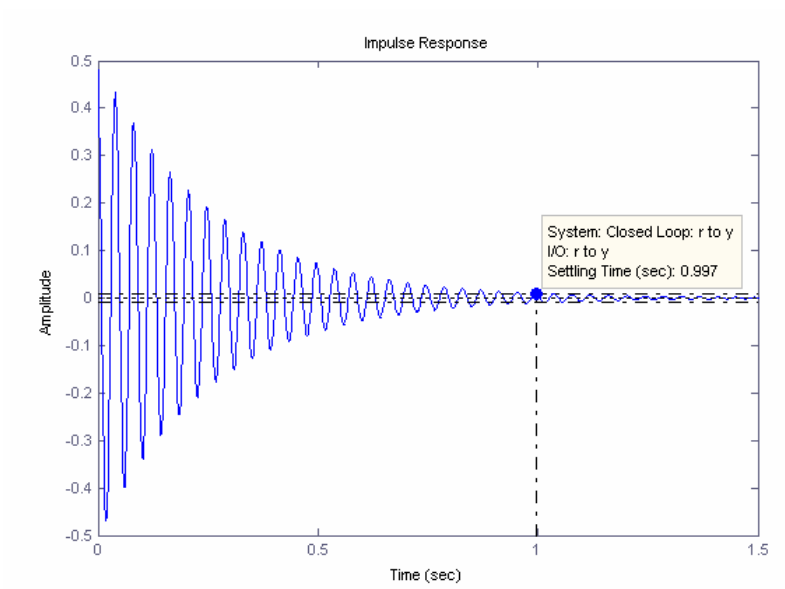

Figure 6, Output (C = 0.0453)

Block Diagram:

From the topology theory proposed a block diagram was assembled:

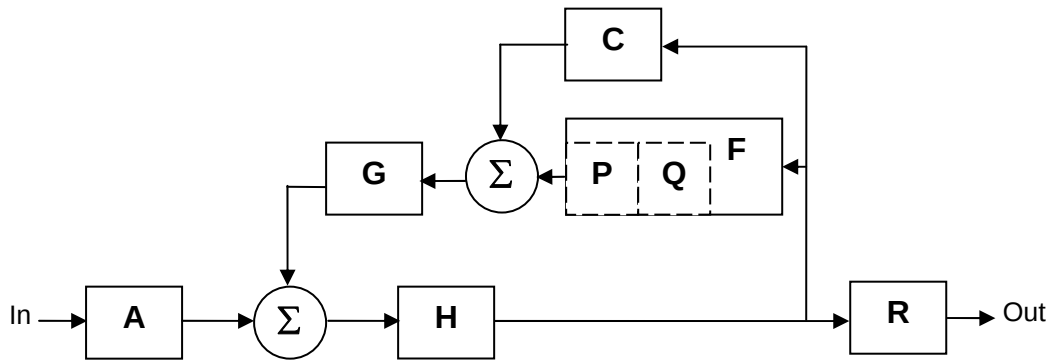

Figure 7, System Block Diagram

A. Input pulse shaper:
Ensures a fixed energy is delivered to the system to start the oscillations independent of the input pulse width.

H. Feedback amplifier:
Providing gain to the closed loop controlled section of the circuit.

G. Feedback element:
Included to stop the amplifiers directly oscillating or latching up.

F. Plant:
The element under feedback control, in this case a simple lowpass filter.

P. Tuning control:
Provides control over the natural frequency of the system.

Q. Non-linear tuning control:
A static frequency is not aesthetically desirable so a control to adjust how the frequency changes over time has been included.

C. Damping amplifier:
Provides control over the settling time of the system.

R. Output Filter:
Correcting any unwanted frequency response characteristics of the closed loop control block.

Constraints:

Developed from existing products capabilities the following constraints were placed on the design:

- Frequency, tuneable over one decade 20-200Hz.
- Decay time, adjustable over 100ms to 1s.
- Insensitivity to input pulse width or frequency.
- Output amplitude ±2dB over entire range of controls.

Circuit Design:

An iterative process using SPICE based simulations to verify the performance at each step was used to the design the circuit. Building outwards from the basic circuit shown in Figure 2 the identified sub systems were introduced.

The opamps chosen for the design were the National Semiconductor LM833 Dual Audio Operational Amplifier in the 8-pin dual in line plastic package. Despite offering a gain bandwidth product of 15MHz they are internally compensated for open loop operation providing very high stability with a phase margin of 60º and are capable of driving highly capacitive loads making them a better choice than the baseline LM741 for our application.

First the closed loop controller was tested without the feed forward compensator as show in Figure 7, this is implementing subsystems G, F, and H.

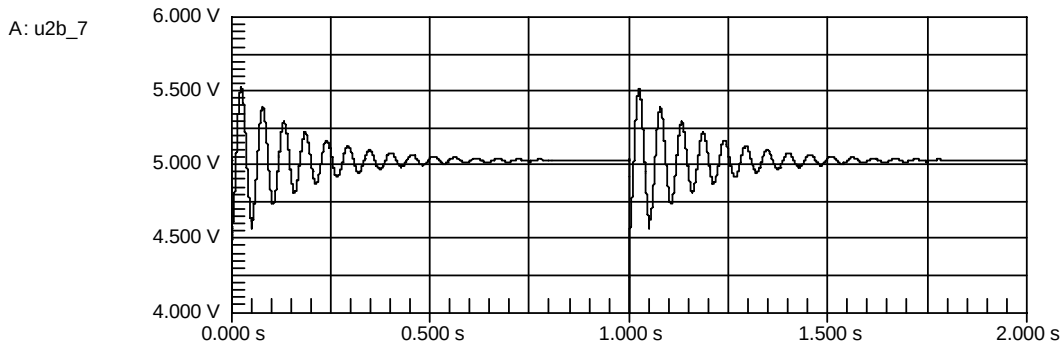

Figure 8, Typical Response

Having found reasonable values, subsystems P and Q (variable resistive elements in the RC filter) were added to control the natural frequency of the system, their effect is shown below in Figure 8.

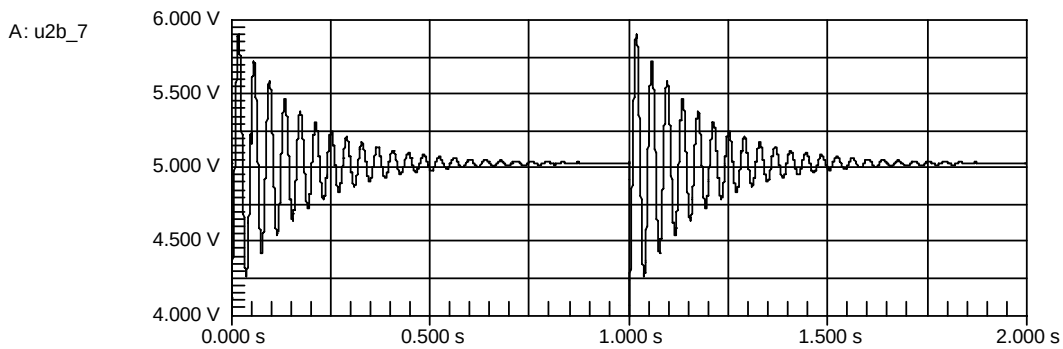

Figure 9, Increased Frequency

The pulse shaper (subsystem A) uses the rectifying and amplifying actions of a transistor triggered by a capacitor charging from the input pulse, the RC time constant of the charging and discharging cycles controlled by separate resistors blocked by diodes in a similar fashion to the 555 timer circuit.

The damping amplifier (subsystem C) was added and the coupling resistors chosen to provide a settling time from 100ms to 1s as per the design specification. A standard value 50kΩ potentiometer was used to minimise costs and the other resistor values were scaled to suit.

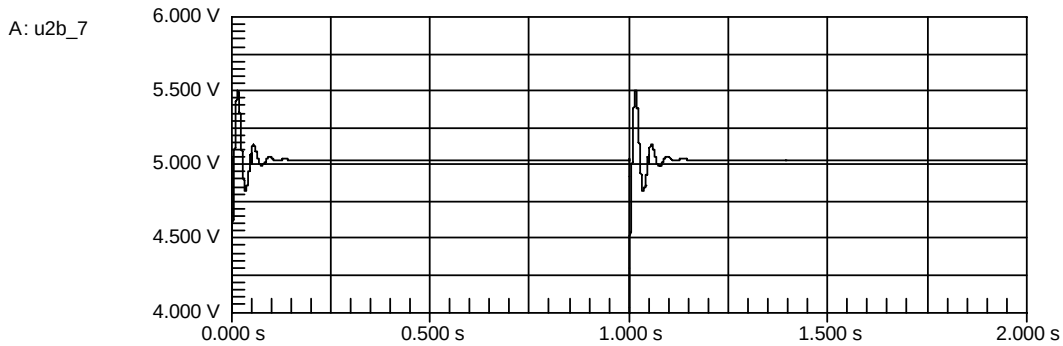

Figure 10, Increased Damping

A small DC offset can be seen in the simulations so the output filter (subsystem R) was configured as a simple 1st order high pass filter.

With all the subsystems integrated the complete circuit diagram could be assembled and is shown below in Figure 10. Many of the component values had to be rounded to standard E12 values to ensure availability and these substitutions slightly affected the performance.

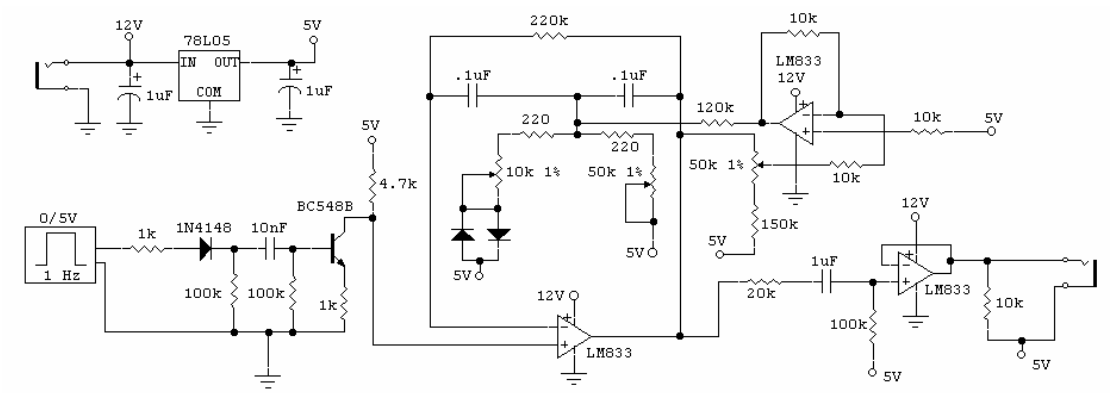

Figure 11, Final Circuit Diagram

Simulations of the complete circuit to compare its performance to the design constraints were run and the simulated values were found to be consistent with the desired values:

- Frequency: 18 to 228Hz
- Settling Time (to 0.5%): 0.15 to 0.97s

The input signal was varied in both frequency and duty factor and it was found any signal of more than 1ms and a period of more than 4ms was suitable to fully trigger and reset the pulse shaping circuit. This corresponds to a 16th note at 250 beats per minute, far faster than any contemporary musical passage.

Printed Circuit Board Design:

To realise the design the circuit was to be built on a printed circuit board. The schematic was exported to a netlist and this netlist imported into Protel to design the circuit layout. Both automatic component placing and automatic track routing functions were tried but neither provided efficient or effective results with many long tracks and highly sparse placement. Instead the interactive routing mode of the software was used to speed up the design.

Track sizes were chosen to trade off high density with low impedance, a standard width of 25mils was used for the majority of tracks as it allows a single trace to comfortably pass between adjacent pads of a 100mil pitch dual-in-line package. Power supply traces were placed with a fixed width of 50mils to match the pad size of the 100mil pitch dual-in-line packages. No planes were poured in the design as the board is highly compact (2x2 inches) and draws little current.

After several design revisions the final board was finished as a single sided design using 2 wire links to connect tracks rather than wasting resources on a top layer.

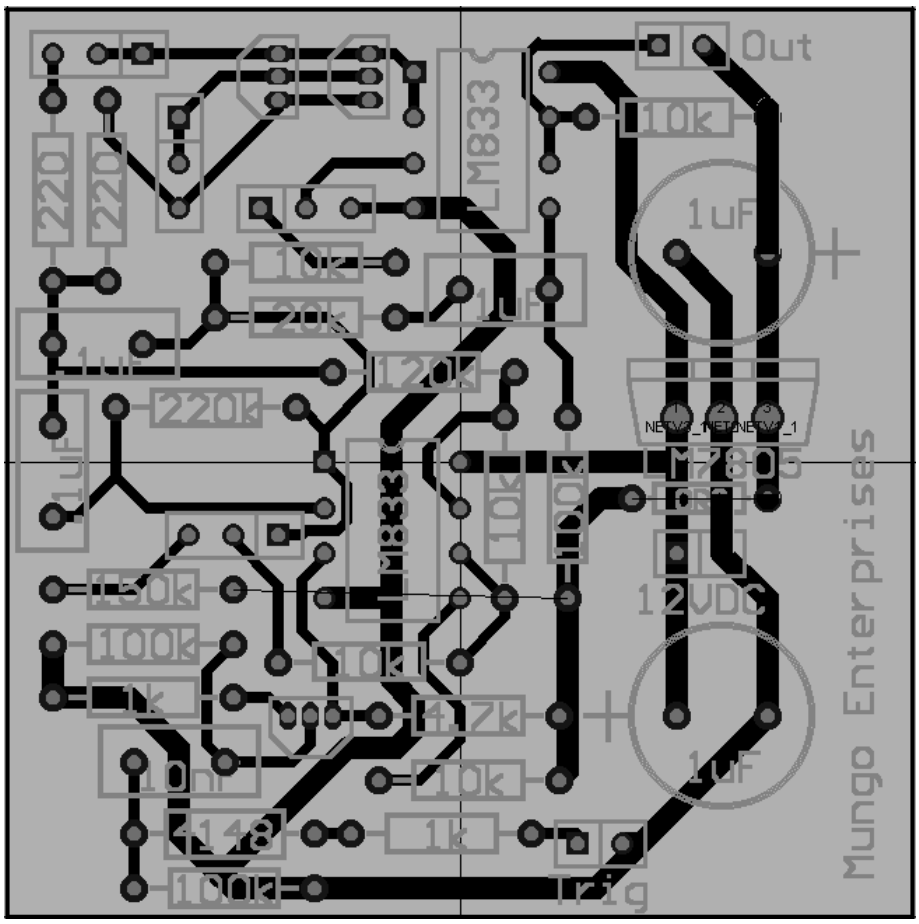

Figure 12, PCB Design

The manufacturer made a mistake in the CAM process and the returned board had no pads tinned on the bottom of the board despite the fact there were no copper entities on the top layer and the overlay was on the top. This required significant manual rework of the traces to expose suitable pads for soldering of the components.

Results:

The circuit was assembled and its performance was measured with an oscilloscope.

The frequency was measured at its highest and lowest points, the resulting frequency range was found to be 28 to 218Hz.

Similarly the settling time (to 0.5%) was observed at both extremities and its range was measured at 0.146 to 0.896s.

The amplitude variation of the signal over both frequency and damping control ranges was 3.4dB.

The variation in the peak amplitude over the damping range was also measured and found to be 0.3dB.

Results:	**Frequency Range:**	**Settling Time (to 0.5%):**
Specifications	20-200Hz	0.100-1.000s
Simulations	18-228Hz	0.150-0.970s
Measured	28-218Hz	0.146-0.896s

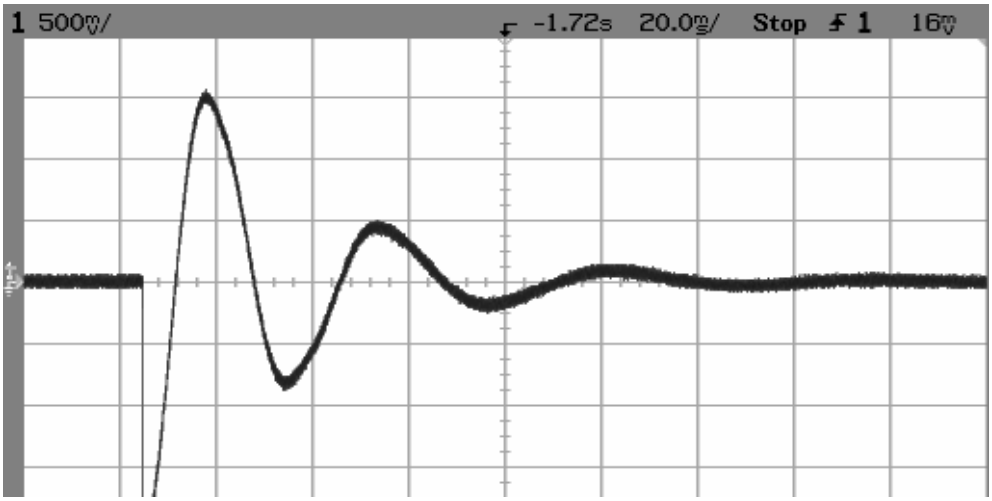

Figure 13, High damping, low frequency

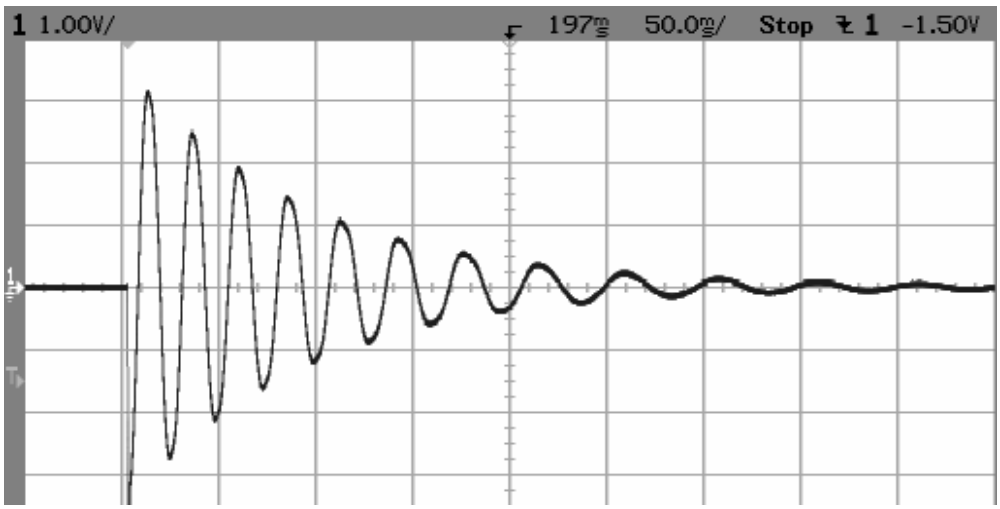

Figure 14, Medium damping, medium frequency

Conclusion:

The measured parameters compared favourably with the simulated results and the initial design specification. The frequency range of 28-218Hz was slightly less than the desired range of one decade. The measured damping range of 0.146- 0.896s was very close to the simulated damping range of 0.15-0.97s. The amplitude variation over all control ranges also met the original design requirements of ±2dB. Small variation in the frequency and settling time from the simulated results have can be attributed to component tolerances (over 10% in many cases). Overall, the system performed consistently with the simulated results (which were slightly different to the design specification due to trade-offs to conform to standard component values).

References:

1. Roland 1982, *TR-606 Service Notes*, First Edition
2. Roland 1981, *TR-808 Service Notes*, First Edition
3. National Semiconductor 1972, *Linear Applications*, First Edition
4. http://home.netspeed.com.au/aistorm/tr606.html
5. http://en.wikipedia.org/wiki/drum_machine/ (as modified 18/10/06)